ARINVIS

Model: ARC-57VA

Key Features

- 4MP Quad HD Resolution
- H.265 Video Compression
- 30m IR Night Vision
- 2.8mm Wide Angle Lens
- AI Smart Detection (Pedestrian & Vehicle)
- Built-in Microphone
- IP67 Weatherproof & Plastic Housing

Camera Specifications

Video	
Imaging Device	1/3"
Effective Pixels	4MP 2560(H)×1440 (V)
Scanning System	Progressive CMOS
Min. Illumination	Color 0.004lux @ F1.6(AGC ON) ; B/W 0 lux @ IR ON
Lens Type	
Focal Length (Zoom Ratio)	2.8mm
Max. Aperture Ratio	F 2.2
Angular Field of View	Horizontal:88 °, Vertical:48 °, Diagonal:105°
Min. Object Distance	
Lens Type	Fixed(M12)
Operational	
IR Viewable Length	Up to 30m
Camera Title	On/Off
Day & Night	IR cut filter with auto switch （Day/Night/Auto/Schedule）
Backlight Compensation	Off/On (5 Zone)
Wide Dynamic Range	DWDR
Digital Noise Reduction	3D DNR
Motion Detection	Off/On (8 Level)
Privacy Masking	Off/On (4 Zone, Rectangle)
Gain Control	Auto
White Balance	Auto/Manual
Electronic Shutter Speed	1/5 ~ 1/20000s
On-Board Storage	Micro SD slot, up to 256GB
Alarm	NA
Audio	Built-in microphone
Hardware Reset	YES

© Arinvis Digital Technology Co., Ltd | Data subject to change without notice

Smart Feature	SMD（Pedestrian&Vehicle ）/Perimeter Intrusion /Line Crossing /Intrusion/Region Entrance/Region Exiting
Network	
Ethernet	RJ45(10/100BASE-T)
Video Compression Format	H.265/H.264
Resolution	**Main Stream@25fps** 4MP(2560x1440) **Sub Stream@25fps** VGA(640x480)
Video Quality Adjustment	128Kbps ~ 4Mbps
Bitrate control method	CBR/VBR
Streaming Capability	Main/Sub
IP	IPv4
Protocol	TCP/IP,HTTP,DHCP,DNS,DDNS,RTP/RTSP, SMTP,NTP,HTTPS
Security	complicated password;Authenticated username and password
Streaming Method	Unicast/Multicast
Application Programming Interface	ONVIF
Web Viewer	IE10,11
Environmental	
Operating Conditions	-35 ~ +60°C/less than ≤ 90% RH
Ingress Protection	IP67
Electrical	
Input Voltage / Current	D12V/POE(IEEE802.3af)
Power Consumption	1.2-4W
Mechanical	
Material	Plastics

Dimension

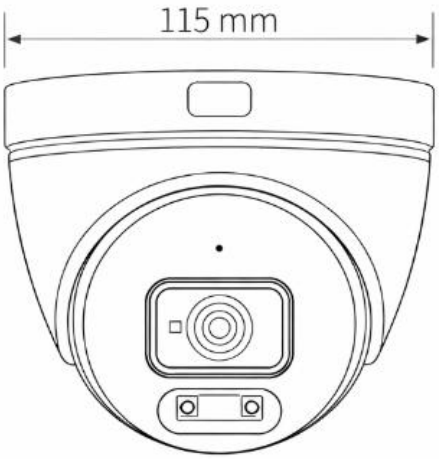

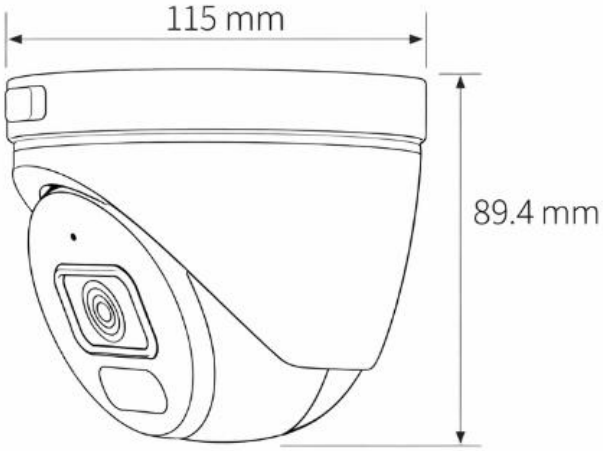
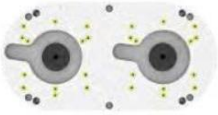
Accessory