ARINVIS

Model: ARC-57VA

Key Features

- 2MP Full HD Resolution
- 25x Optical Zoom
- 100m IR Night Vision
- AI Deep Learning Analytics
- Auto-Tracking
- 120dB True WDR
- IP66 Metal Housing

Camera Specifications

Camera	
Image Sensor	1/2.8" Progressive Scan CMOS
Max. Resolution	1920x1080
Min. Illumination	Color: 0.002 Lux @ (F1.6, AGC ON), B/W: 0 Lux with IR
Shutter Speed	1/5 s to 1/20000 s
Slow Shutter	Yes
Day & Night	IR cut filter
Zoom	25x optical
Lens	
Focal Length	5.0 mm to 125 mm
FOV	Horizontal field of view: 56.9° to 2.9° (wide-tele), Vertical field of view: 32.2° to 1.6° (wide-tele), Diagonal field of view:65.2° to 3.3° (wide-tele)
Aperture	Max. F1.5
Focus	Auto,manual
Illuminator	
Supplement Light Range	IR Distance: up to 100 m
Supplement Light Type	IR
PTZ	
Movement Range(Pan)	360°
Movement Range(Tilt)	-10° to 90° (auto flip)
Pan Speed	Pan speed: configurable from 0.6° to 80°/s; preset speed: 120°/s
Tilt Speed	Tilt speed: configurable from 0.6° to 80°/s, preset speed 100°/s
Presets	255
Patrol Scan	1 Scan

Pattern Scan	4 pattern
Power-Off Memory	Yes
3D Positioning	Yes
Video	
Main Stream	50 Hz: 25 fps (1920 × 1080, 1280 × 960, 1280 × 720); 60 Hz: 30 fps (1920 × 1080, 1280 × 960, 1280 × 720)
	60 Hz: 30 fps (640 × 480, 352 × 240)
Third Stream	50 Hz: 25 fps (320x240); 60 Hz: 30 fps (320x240)
Video Compression	Main stream: H.265+/H.265/H.264+/H.264 Sub-stream: H.265+/H.265/H.264+/H.264/MJPEG Third stream: H.265+/H.265/H.264+/H.264
Video Bit Rate	8 kbps to 8192 kbps
H.264 Type	Baseline Profile/Main Profile/High Profile
H.265 Type	Main Profile
Region Of Interest (ROI)	NA
Audio	
Audio Compression	G.711a/G.711u
Network	
Protocols	IPv4/IPv6, HTTP, HTTPS, FTP, SMTP, UPnP, SNMP, DNS, DDNS, NTP, RTSP, TCP/IP, UDP, DHCP, PPPoE,
API	Onvif (Profile S, Profile G, Profile T),Http API
Simultaneous	Live View Up to 15 channels
User/Host	5 User
Security	Password protection, complicated password, HTTPS encryption, IP address filter,control timeout settings
Client	VMS
Web Browser	IE10/11 Safari V12.1 above Firefox V.52 above Google chrome V.57 above Edge V.79 above
Image	
Day/Night Switch	Day, Night, Auto, Schedule
Image Enhancement	BLC, HLC, 3D DNR
Wide Dynamic Range (WDR)	120 dB
Defog	NA
Image Stabilization	NA
Image Settings	Saturation, brightness, contrast, sharpness, Hue and white balance adjustable by client software or web browser
Privacy	4 privacy masks
Interface	
Ethernet Interface	1 RJ45 10M/100M self-adaptive Ethernet port
On-Board Storage	Built-in memory card slot, support microSD/SDHC/SDXC card, up to 256 GB
Alarm	1 inputs, 1 output
Audio	1 inputs, 1 output
Reset	Yes
Built-In Speaker	NA
Event	

Basic Event	Motion detection, alarm input and output
Deep Learning Function	Face Recognition, Human & Vehicle Detection, Perimeter Intrusion Detection, Line Crossing Detection, Stationary Object Detection, Crossing Counting, Heat Map, Crowd Density Detection, Queue Length Detection, License Plate Detection
Smart Tracking	auto-tracking
Alarm Linkage	Upload to FTP, send email, trigger alarm output, trigger recording
General	
Power	DC 12V/POE+, max. 22 W
Operating Condition	-30 °C to 60 °C (-22 °F to 149 °F). Humidity 90% or less (non-condensing)
Material	Metal
Dimension	Ø 160 mm × 270 mm (Ø 6.3" × 10.6")
	Approx. 2.5 kg (5.51lb.)
Approval	
Protection	IP66

Dimension

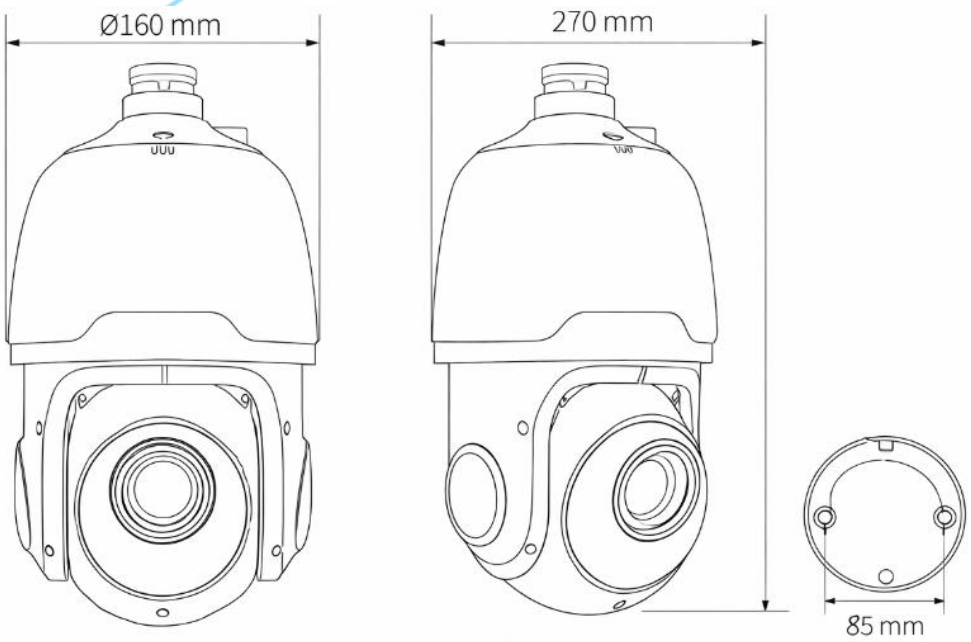

Accessory