ARINVIS

Model: ARC-57VA

Key Features

- 2MP Full HD Resolution
- H.265 Video Compression
- 25m IR Night Vision
- 3.6mm Fixed Lens
- AI Smart Detection (Pedestrian & Vehicle)
- Built-in Microphone & Defog Support
- IP66 Weatherproof & Plastic Housing

Camera Specifications

Video	
Imaging Device	1/3"
Effective Pixels	2MP 1920(H)×1080 (V)
Scanning System	Progressive CMOS
Min. Illumination	Color 0.008lux @ F1.6(AGC ON) ; B/W 0 lux @ IR ON
Lens Type	
Focal Length (Zoom Ratio)	3.6 mm
Max. Aperture Ratio	F No. 2.0
Angular Field of View	Horizontal:77° , Vertical:42°, Diagonal:90 °
Min. Object Distance	1.8m
Lens Type	Fixed(M12)
Operational	
IR LED	1
IR Viewable Length	Up to 25m
Motion Detection	Off/On (8 Level)
Wide Dynamic Range	DWDR
Digital Noise Reduction	3D DNR
Day & Night	IR cut filter with auto switch（Day/Night/Image/Schedule）
White Balance	Auto/Manual
Electronic Shutter Speed	1/5 ~ 1/20000s
On-Board Storage	NA
Alarm	NA
Audio	Built-in microphone
P2P	NA
Hardware Reset	NA

© Arinvis Digital Technology Co., Ltd | Data subject to change without notice

Smart Feature	SMD(Pedestrian & Vehicle) , Line Crossing , Intrusion, Region Entrance, Region Exiting
Defog	YES
Network	
Ethernet	RJ45(10/100BASE-T)
Video Compression Format	H.265/H.264
Resolution	Main Stream@30fps 2MP(1920x1080) 720P(1280x720) Sub Stream@30fps D1（704x480） VGA(640x480)
Video Quality Adjustment	512Kbps ~ 4Mbps
Bitrate control method	CBR/VBR
P2P	NA
IP	IPv4
Protocol	TCP/IP,HTTP,DHCP,DNS,DDNS,RTP/RTSP, SMTP,NTP,HTTPS
Security	complicated password;Authenticated username and password
Application Programming Interface	ONVIF
Web Viewer	IE10/11
Video	
Environmental	
Operating Conditions	-35～+55°C/less than 90% RH
Ingress Protection	IP66
Electrical	
Input Voltage / Current	POE(IEEE802.3af)
Power Consumption（IR OFF)	PoE（48V） : max 2.93W
Power Consumption（IR ON）	
Mechanical	
Material	Plastic
Dimensions (HxWxD)	
Weight	

Dimension

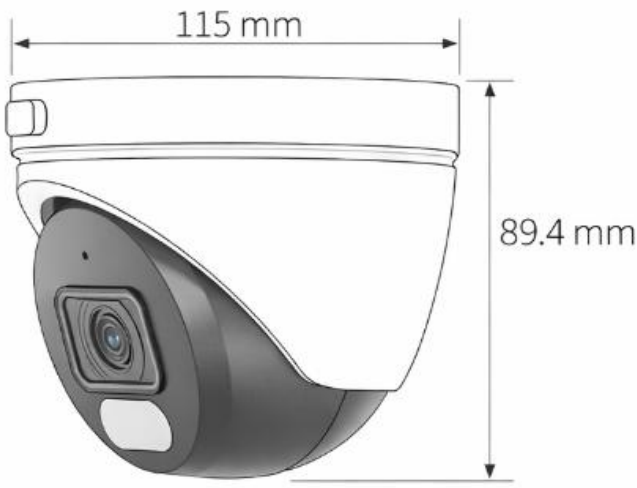
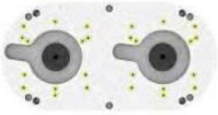
Accessory